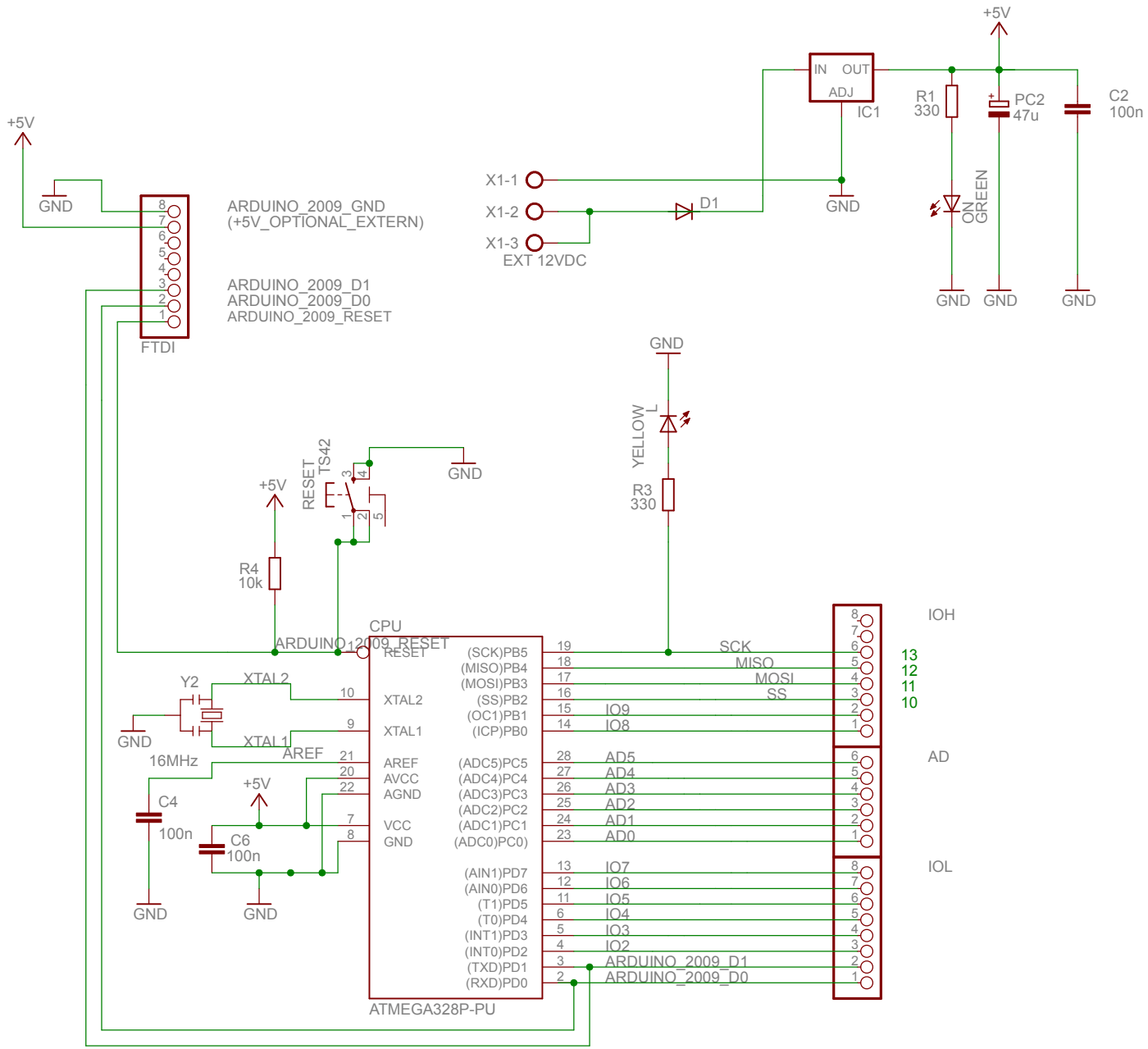
+5V
GND
FTDI
ARDUINO_2009_GND
(+5V_OPTIONAL_EXTERN)
ARDUINO_2009_D1
ARDUINO_2009_D0
ARDUINO_2009_RESET
X1-1
X1-2
X1-3
EXT 12VDC
D1
IN
OUT
ADJ
IC1
R1
330
PC2
47u
C2
100n
ON
GREEN
YELLOW
L
R3
330
RESET
TS42
R4
10k
CPU
ARDUINO_2009_RESET
RESET
XTAL2
XTAL1
AREF
AVCC
AGND
VCC
GND
Y2
16MHz
C4
100n
C6
100n
(SCK)PB5
(MISO)PB4
(MOSI)PB3
(SS)PB2
(OC1)PB1
(ICP)PB0
(ADC5)PC5
(ADC4)PC4
(ADC3)PC3
(ADC2)PC2
(ADC1)PC1
(ADC0)PC0)
(AIN1)PD7
(AIN0)PD6
(T1)PD5
(T0)PD4
(INT1)PD3
(INT0)PD2
(TXD)PD1
(RXD)PD0
ATMEGA328P-PU
SCK
MISO
MOSI
SS
IO9
IO8
AD5
AD4
AD3
AD2
AD1
AD0
IO7
IO6
IO5
IO4
IO3
IO2
ARDUINO_2009_D1
ARDUINO_2009_D0
IOH
AD
IOL
13
12
11
10